SHIMANO®

BAITRUNNER AERO BTA-GTE8000

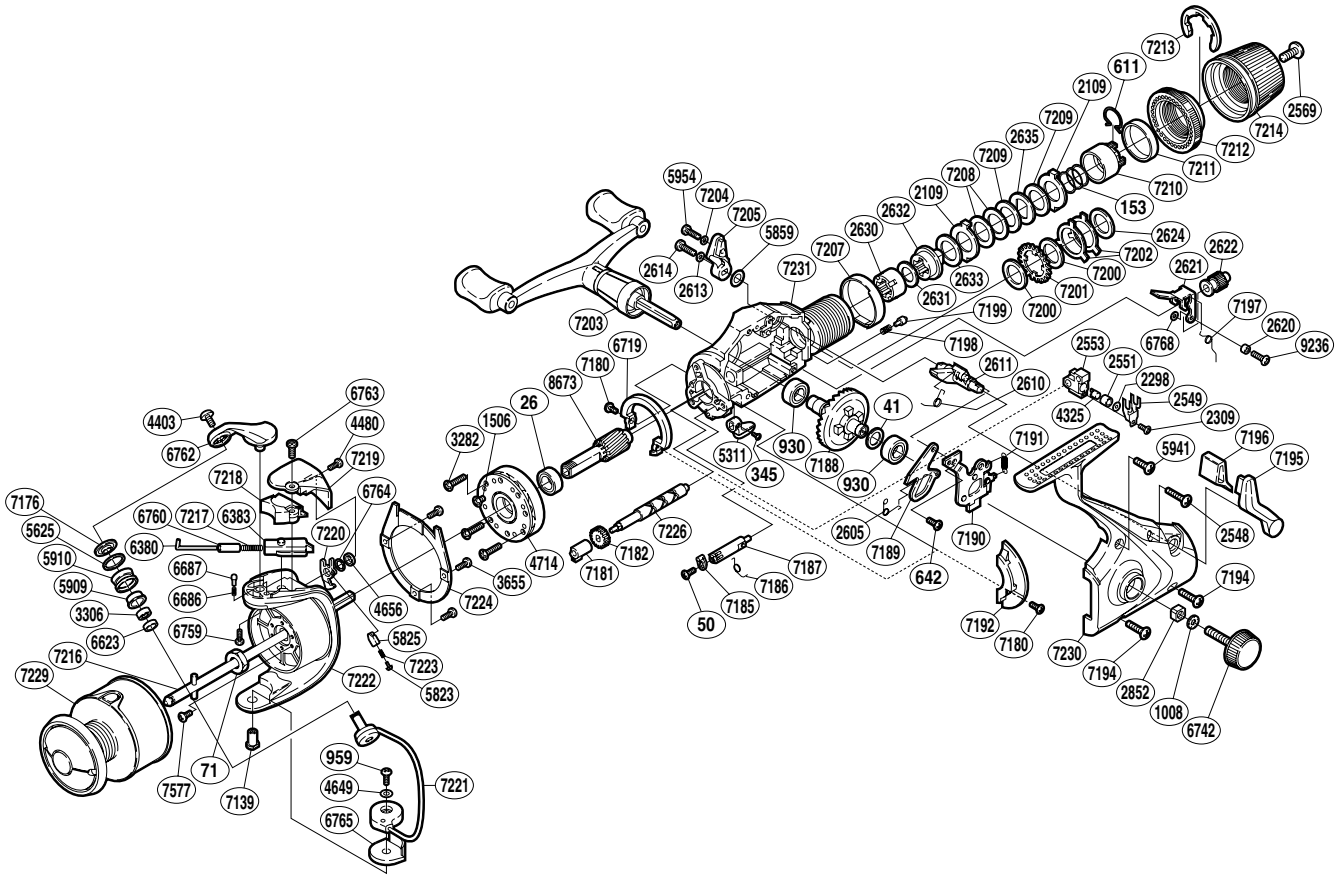

Part No.	Description	Part No.	Description	Part No.	Description
RD 0026	Ball Bearing	RD 4403	Line Roller Screw	RD 7191	BaitRunner Click Spring
RD 0041	Drive Gear Washer	RD 4480	Rotor Protector Screw (small)	RD 7192	Side Cover Flange
RD 0050	Anti-Reverse Cam Plate Screw	RD 4649	Spacer	RD 7194	Side Cover Screw (medium)
RD 0071	Rotor Nut	RD 4656	Trip Lever Spacer	RD 7195	BaitRunner Lever Arm (L)
RD 0153	Drag Coil Spring	RD 4714	Roller Clutch Assembly	RD 7196	BaitRunner Lever Bridge
RD 0345	Anti-Reverse Lever Screw	RD 5311	Anti-Reverse Lever	RD 7197	Clutch Shaft Spring
RD 0611	Hold Click Spring	RD 5625	Line Roller Spacer	RD 7198	Dial Click Spring
RD 0642	Clutch Plate Screw	RD 5823	Lever Spring Guide (A)	RD 7199	Dial Click Shoe
RD 0930	Ball Bearing	RD 5825	Lever Spring Guide (B)	RD 7200	Drag Washer “C”
RD 0959	Bail Hold Support Screw	RD 5859	BaitRunner Lever Spacer	RD 7201	Click Gear
RD 1008	Handle Lock Washer	RD 5909	Line Roller Bushing	RD 7202	Eared Washer “BFS”
RD 1506	Clutch Cover Screw	RD 5910	Line Roller	RD 7203	Double Paddle Handle Assembly
RD 2109	Eared Washer “B”	RD 5941	Side Cover Screw (short)	RD 7204	Lock Washer (A)
RD 2298	Spacer	RD 5954	BaitRunner Lever Screw	RD 7205	BaitRunner Lever Arm (R)
RD 2309	Slider Retainer Screw	RD 6380	Bail Spring Guide (A)	RD 7207	Dial Spacer
RD 2548	Side Cover Screw (long)	RD 6383	Bail Spring Guide (B)	RD 7208	Spacer
RD 2549	Oscillating Slider Retainer	RD 6623	Bearing Spacer	RD 7209	Drag Washer “H” (black)
RD 2551	Oscillating Slider Bushing	RD 6686	Click Spring	RD 7210	Pressure Screw
RD 2553	Oscillating Slider	RD 6687	Bail Arm Click	RD 7211	Dial Washer
RD 2569	Drag Knob Screw	RD 6719	Friction Ring	RD 7212	BaitRunner Tension Dial
RD 2605	Clutch Pawl Spring	RD 6742	Handle Screw Cap	RD 7213	Dial Retainer Ring
RD 2610	Clutch Spring	RD 6759	Bail Arm Screw	RD 7214	Drag Knob
RD 2611	BaitRunner Lever Shaft	RD 6760	Bail Spring Guide (A) Collar	RD 7216	Main Shaft
RD 2613	Lock Washer (B)	RD 6762	Bail Arm	RD 7217	Bail Spring
RD 2614	BaitRunner Lever Screw (B)	RD 6763	Rotor Protector Screw (large)	RD 7218	Bail Spring Cover
RD 2620	Clutch Screw Collar	RD 6764	Spacer	RD 7219	Bail Spring Cover Guard
RD 2621	BaitRunner Clutch	RD 6765	Bail Hold Support Spacer	RD 7220	Bail Trip Lever
RD 2622	Clutch Shaft	RD 6768	Spacer	RD 7221	Bail Assembly
RD 2624	Drag Washer “C” (blue)	RD 7139	Bail Hold Support Shaft	RD 7222	Rotor
RD 2630	Free Spool Tension Shaft	RD 7176	Line Roller Washer	RD 7223	Lever Spring
RD 2631	Drag Washer “D”	RD 7180	Friction Ring Screw	RD 7224	Guard Ring
RD 2632	Drag Shaft	RD 7181	Worm Bushing	RD 7226	Worm Shaft
RD 2633	Drag Washer “H” (cloth)	RD 7182	Idle Gear	RD 7229	Spool Assembly
RD 2635	Key Washer “A”	RD 7185	Anti-Reverse Cam Plate	RD 7230	Side Cover
RD 2852	Handle Screw Lock	RD 7186	Anti-Reverse Cam Spring	RD 7231	Body
RD 3282	Roller Clutch Screw	RD 7187	Anti-Reverse Cam	RD 7577	Nut Lock Screw
RD 3306	Line Roller Bearing	RD 7188	Drive Gear	RD 8673	Pinion Gear (B)
RD 3655	Guard Ring Screw	RD 7189	Clutch Pawl	RD 9236	BaitRunner Clutch Screw
RD 4325	Oscillating Pawl	RD 7190	Clutch Plate Assembly		

(170823)